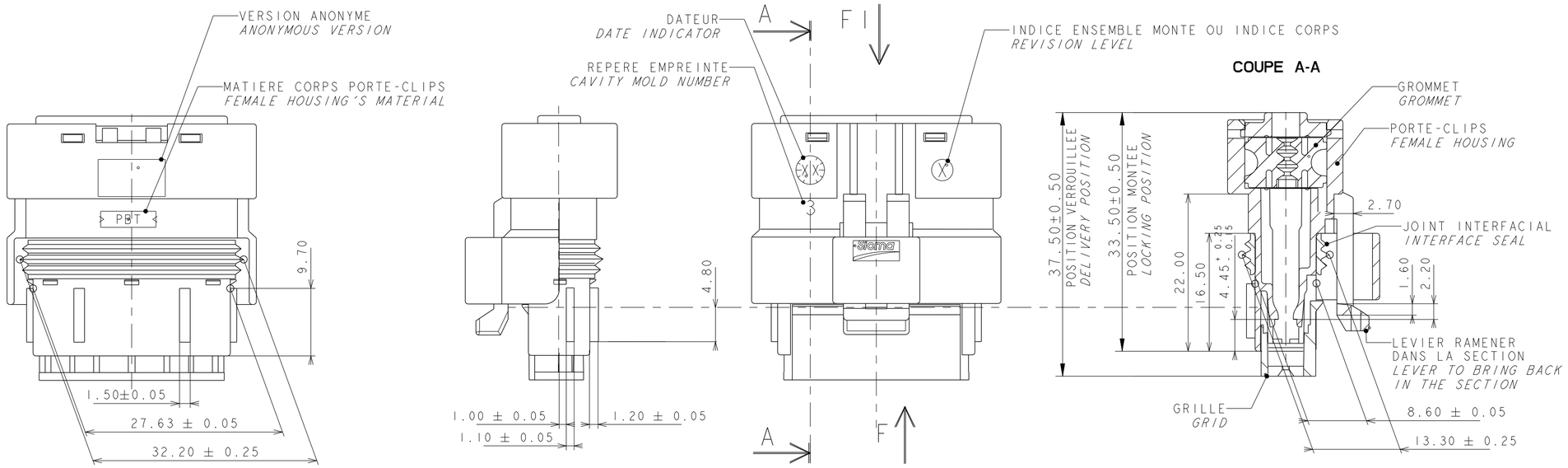

211 CC 3 S 2 160	10726549	2.8x0.8	2	Sn Pb	Cu Fe
211 CC 3 S 2160	10726549	2.8x0.8	1	Sn Pb	Cu Fe
211 CC 2 S 2160	10756749	1.5x0.8	2	Sn Pb	Cu Fe
211 CC 2 S 1160	10740374	1.5x0.8	1	Sn Pb	Cu Fe
211 CC 3 S 3120	10725665	2.8x0.8	3	Sn Pb	Cu Mgl
211 CC 3 S 2120	15368841	2.8x0.8	2	Sn Pb	Cu Mgl
211 CC 3 S 1120	10725666	2.8x0.8	1	Sn Pb	Cu Mgl
211 CC 2 S 2120	10726212	1.5x0.8	2	Sn Pb	Cu Mgl
211 CC 2 S 1230	10738192	1.5x0.8	1	Au	Cu Mgl
211 CC 2 S 1120	10738188	1.5x0.8	1	Sn Pb	Cu Mgl
MVL	**DELPHI**				
CONTACT REF. *TERMINAL REF.*		**TYPE** *TYPE*	**GAMME** *RANGE*	**REVETEMENT** *PLATING*	**MATIERE** *MATERIAL*

NOTA *NOTE*	SPECIFICATIONS
1	CONNECTEUR DOIT ETRE CONFORME AU CDC: *FEMALE CONNECTOR ACCORDING TO PSA SPECIFICATION:* 96 238 404 99
2	CONNECTEUR SUIVANT: *FEMALE CONNECTOR ACCORDING TO:* -CLASSE DE TEMPERATURE T3 SELON B217050 REV A *-TEMPERATURE CLASS T3 ACCORDING TO B217050 REV A* -CLASSE DE VIBRATION MOTEUR SELON B217050 REV A *-ENGINE VIBRATOR CLASS ACCORDING TO B217050 REV A* -CLASSE ETANCHEITE 2 SELON B217050 REV A *-SEALING CLASS 2 ACCORDING TO B217050 REV A*
3	PRECONISATION D'UTILISATION: *USER'S MANUAL:* PU 001
4	ALVEOLE SUIVANT: *CAVITY ACCORDING TO* STE: 96 288 230 99
5	CONNECTEUR ET POSITION ALVEOLE CONFORMES AU PLAN D'INTERFACE: *FEMALE CONNECTOR AND CAVITY'S POSITION* *ACCORDING TO INTERFACE DRAWING:* 211FT0289 ET/*AND* STE 96 339 622 99
6	CONDUCTEUR SUIVANT/ *WIRE ACCORDING TO:* STE :96 418 794 99
7	CONDITIONNEMENT SUIVANT NORME: *PACKAGING ACCORDING TO STANDARD:* E73 03 150G
8	DIAMETRE DE L'ISOLANT DES FILS / *WIRE INSULATION DIAMETER* Ø1.5 MINI=1.40 MAXI=2.80 Ø2.8 MINI=1.60 MAXI=3.45
9	MASSE DU CONNECTEUR LIVRE / DELIVERY CONNECTOR WEIGHT: 12g
10	CHARNIERE DE PLAQUETTE ARRIERE ABSENTE OU CASSEE ADMISE *NO WAFER HINGE OR WAFER HINGE BROKEN ALLOWED*
11	DEFAUTS D'ASPECT SUR ZONES NON FONCTIONNELLES ADMIS *VISUAL DEFECTS ON NO FUNCTIONNAL AREAS ALLOWED*

PORTE-CLIPS 6V 1.5 ***FEMALE CONNECTOR 6W 1.5***	PORTE-CLIPS *FEMALE HOUSING*	211 I 4 067	PBT 0% FV *PBT 0% GF*	JAUNE *YELLOW*
		211 I 5 067		VERT *GREEN*
		211 I 1 067		MARRON *BROWN*
	GRILLE *GRID*	211 M 7 087	PBT 15% FV *PBT 15% GF*	*VIOLET PURPLE*
	GROMMET *GROMMET*	211 M 110	SILICONE *SILICON* 30 shores	VERT *GREEN*
	JOINT INTERFACIAL *INTERFACE SEAL*	211 M 077	SILICONE *SILICON* 30 shores	BLEU *BLUE*
	BOUCHON *PLUG*	210 A 01 5 019	PBT 0% FV *PBT 0% GF*	VERT *GREEN*
PORTE-CLIPS 6V MIXTE ***FEMALE CONNECTOR 6W HYBRID***	PORTE-CLIPS *FEMALE HOUSING*	211 I 8 031	PBT 0% FV *PBT 0% GF*	GRIS *GREY*
		211 I 6 031		BLEU *BLUE*
		211 I 0 031		NOIR *BLACK*
	GRILLE *GRID*	211 M 4 047	PBT 15% FV *PBT 15% GF*	JAUNE *YELLOW*
	GROMMET *GROMMET*	211 M 110	*SILICONE SILICON 30 shores*	VERT *GREEN*
	JOINT INTERFACIAL *INTERFACE SEAL*	211 M 077	SILICONE *SILICON* 30 shores	BLEU *BLUE*
	BOUCHON *PLUG*	210 A 01 5 019	PBT 0% FV *PBT 0% GF*	VERT *GREEN*
	DESIGNATION ***DESCRIPTION***	**REF. MVL** ***MVL'S REFERENCE***	**MATIERE** ***MATERIAL***	**COULEUR** ***COLOUR***

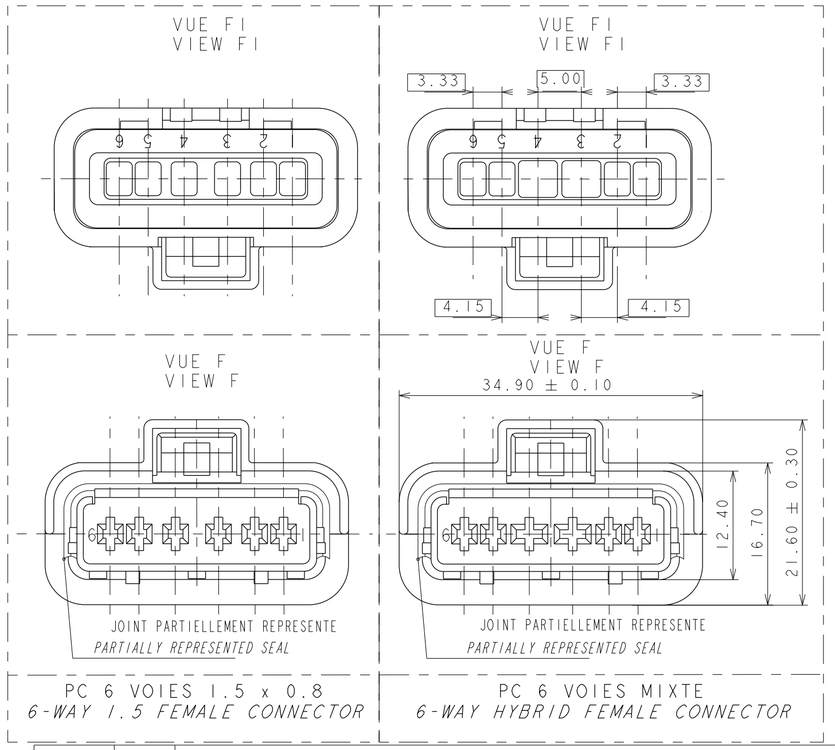

PC 6 VOIES 1.5 x 0.8
6-WAY 1.5 FEMALE CONNECTOR

PC 6 VOIES MIXTE
6-WAY HYBRID FEMALE CONNECTOR

PORTE-CLIPS 6V MIXTE
6 WAY HYBRID FEMALE CONNECTOR

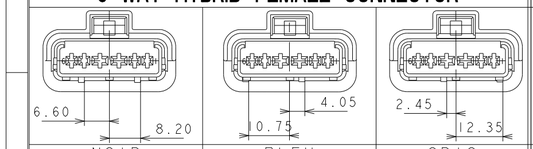

PORTE-CLIPS 6V 1.5
6 WAY 1.5 FEMALE CONNECTOR

E

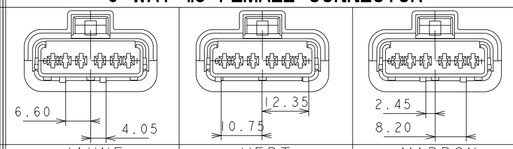

VUE F
VIEW F
±0.10

	NOIR *BLACK*	BLEU *BLUE*	GRIS *GREY*	JAUNE *YELLOW*	VERT *GREEN*	MARRON *BROWN*	COULEUR *COLOUR*	
	211 PC 06 9S 0 049	211 PC 06 9S 6 049	211 PC 06 9 S 8 049	211 PC 06 2 S 4 049	211 PC 06 2 S 5 049	211 PC 06 2 S 1 049	REF. *REF.*	MVL
	C	C	C	C	C	C	REV. *REV.*	
	10768569	10779505	10768704	10812008	3350031I	10769031	REF. *REF.*	DELPHI
	02	02	02	02	01	02	REV. *REV.*	

-	-	-
	-	-
	-	-
	-	ERROR ON VIEWS CODINGS CORRECTED

ECN-NO. *NUMERO ECN*	POSITION *POSITION*	CHANGE DESCRIPTION *MODIFICATION*
-		

PRODUCT SPEC. *SPECIF. PRODUIT* -
PACKAGING SPEC. *SPECIF. EMBALLAGE* -
APPLICATION SPEC. *SPECIF. APPLICATION* -

COPYRIGHT DELPHI CORPORATION AND/OR ITS AFFILIATES. ALL RIGHTS RESERVED. REVISED
THIS DRAWING IS THE PROPERTY OF DELPHI CORPORATION AND CONTAINS DELPHI CONFIDENTIAL INFORMATION. THE REPRODUCTION, DISTRIBUTION AND UTILIZATION OF THIS DOCUMENT OR ITS RELATED CAD MATH DATA, AS WELL AS COMMUNICATION OF ANY CONTENT TO OTHERS, WITHOUT EXPRESS AUTHORIZATION, IS PROHIBITED.
CE PLAN EST LA PROPRIETE DE DELPHI CORPORATION ET CONTIENT DES INFORMATIONS DELPHI CONFIDENTIELLES. LA REPRODUCTION, LA DISTRIBUTION ET L'UTILISATION DE CE DOCUMENT OU DE SES DONNEES MATHEMATIQUES CAO, AINSI QUE LA COMMUNICATION DE TOUT CONTENU A AUTRUI, SANS AUTORISATION EXPRESSE, EST INTERDITE.

TOLERANCES *TOLERANCES* ±0.1 ±2°
MATERIAL : *MATIERE :* VOIR TABLEAU SEE TABLE
SURFACE FINISH *ETAT DE SURFACE* -
COUNTERPART Nr. *CONTRE-PARTIE N°* 211PL069SX049
COLOUR : *COULEUR :* SEE TABLE
DO NOT MEASURE DRAWING *NE PAS PRENDRE DE COTES*
TOOL NO. *OUTIL N°* -
ECO Loc. Code *CODE B.E.* FE

DELPHI
DELPHI PACKARD ELECTRICAL/ELECTRONIC ARCHITECTURE
EPERNON, FRANCE

CAD SYSTEM: pro / eng.
ISO PROJECTION *PROJECTION ISO*
DIMENSION IN MILLIMETERS *DIMENSIONS EN MILLIMETRES*
DWG SIZE *FORMAT*: A2

	DATE *DATE*	NAME *NOM*
CREATED BY *CREE PAR*	2002-07-23	AT
MODIFIED BY *MODIF. PAR*	2014/01/28	F FAURIE
CHECKED BY *VERIF. PAR*	2014/01/28	S LACOTE
APPROVED BY *APPR. PAR*	2014/01/28	Pascal MENARD

TITLE *DESIGNATION*: 6-WAY 1.5·0.8 or HYBRID
PROJECT *PROJET*: 6-WAY 1.5·0.8 or HYBRID
ESR NO. *NUMERO ESR* FRA-0102
CAT. NO. *NUMERO CAT.* -
DOCUMENT UNDER PDS CONTROL
NO MODIFICATION ALLOWED OUTSIDE *DOCUMENT GERE SOUS P.D.S. PAS DE MODIFICATION EN DEHORS*
FILE NAME *NOM DE FICHIER* 211FT0447

DRAWING NUMBER *REF. PLAN* 211FT0447 REV. *IND.* E
STATE *ETAT* SERIAL RELEASED
PART NUMBER *REF. ARTICLE* See Table REV. *IND.* -
APPROVAL LEVEL *NIV. D'APPROBATION* -
SHEET *FEUILLE* 1 of 1 *sur* 1
SCALE *ECH.* 1:1

EUR C04 112 F29 PDS