DO NOT SCALE

D

DELPHI PACKARD ELECTRIC SYSTEMS
WARREN, OHIO 44486

PART NO 1216 0480

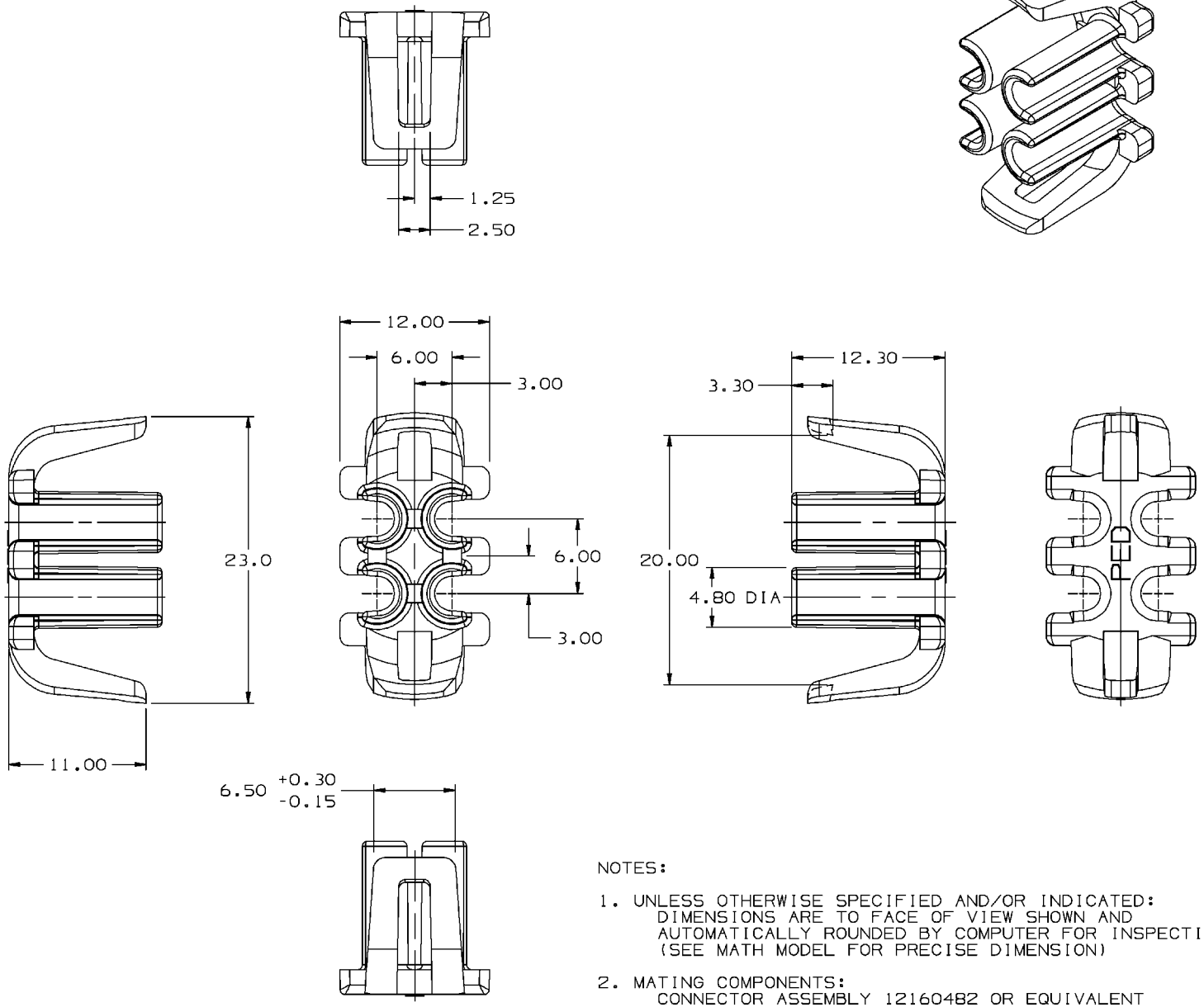

DATE	SYM	REVISION RECORD	AUTH	DR	CK
18AP94	A	WAS PE041373 & RELEASED	940005	KLJ	DLB
18JL94	B	REVISED GRAPHICS	161374	AUG	DLB
23NO94	B1	REVISED	164472	JGS	BAS
10AP97	B2	UPDATED AND REVISED			
		GRAPHICS	177578	HH	JIB
21OC98	B3	UPDATED AND REVISED			
		GRAPHICS	190269	JIB	JIB

PART NO 1216 0480

NOTES:

1. UNLESS OTHERWISE SPECIFIED AND/OR INDICATED:
   DIMENSIONS ARE TO FACE OF VIEW SHOWN AND
   AUTOMATICALLY ROUNDED BY COMPUTER FOR INSPECTION.
   (SEE MATH MODEL FOR PRECISE DIMENSION)

2. MATING COMPONENTS:
   CONNECTOR ASSEMBLY 12160482 OR EQUIVALENT

DRAWING TYPE PID	OTHER DRAWINGS AVAILABLE
UGraphics II	METRIC DIMENSIONS ARE IN MILLIMETERS UNLESS OTHERWISE SPECIFIED
THIRD ANGLE PROJECTION	TOLERANCE UNLESS OTHERWISE SPECIFIED DECIMAL: ANGULAR ± 2°
CODE NO 6900 / QC	ONE PLACE ± 0.3 / TWO PLACE ± 0.15
	DES DAN HUFF 14OC93
DWG DATE 18AP94	DR K.L. JONES 18AP94
SCALE 4:1	CK D BRANTINGHAM 19AP94
REFERENCE NO 12160480 "A1" SIZE	APPR PAUL OLBRYCH 25AP94
	VOL CM³ 0.759
MATERIAL SPEC R0071784 NYLON 66 HS IM MEDIUM GRAY	
NAME TPA M/P 150	
PART NUMBER 1216 0480	SIZE A2