SYMBOL DEFINITION		
A DIMENSION WITHOUT AN INSPECTION REPORT SYMBOL ( ) DOES NOT REQUIRE INSPECTION. IT MAY BE CONTROLLED ON THE INDIVIDUAL COMPONENT DRAWING.	TOTAL NO OF INSPECTIONS REQUIRED	11
	LAST NO. USED	6

MISSING SYMBOLS
NO MISSING SYMBOL NUMBER

DWG STATUS					ZONE	REVISION HISTORY	AUTH	DR	APVD 1	APVD 2
DATE	STG	REV	N/P	CHG						
02MR02	R	001	-	-		RELEASED	221680	JHN	GGI	JSM
30MR09	R	01	AA	-		UPDATED MAT'L CALLOUT & REMOVED MAT'L RECYCLING CODE NOTE	407671	JRL	GLG	DGL

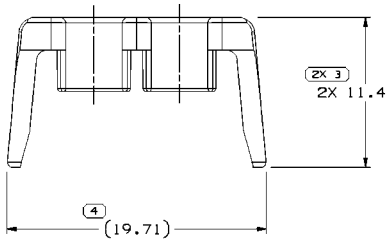

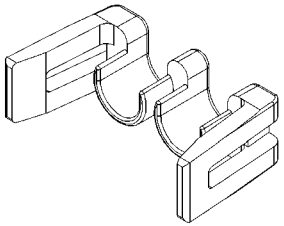

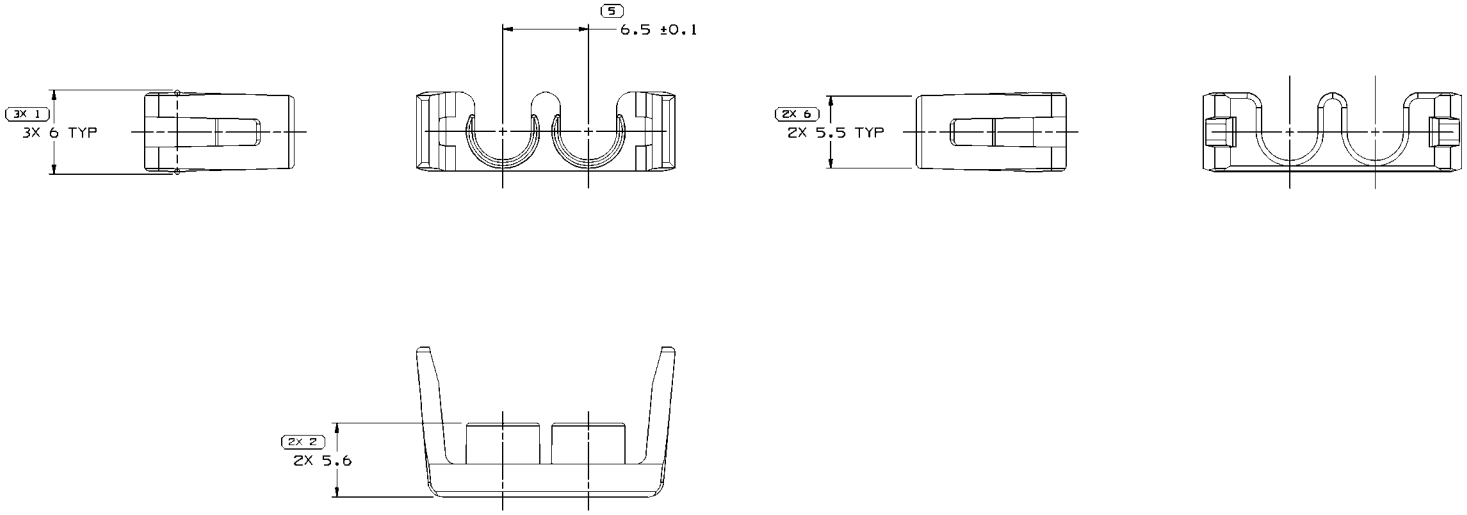

NOTES

1. UNLESS OTHERWISE SPECIFIED AND/OR INDICATED:

   DIMENSIONS ARE TO FACE OF VIEW SHOWN AND AUTOMATICALLY ROUNDED BY COMPUTER FOR INSPECTION (SEE MATH MODEL FOR PRECISE DIMENSIONS). FOR ALL OTHER DIMENSIONS NOT SHOWN BUT REQUIRED FOR TOOL BUILD, SEE MATH MODEL FOR PRECISE TOOL PATH DATA.

2. THIS PRODUCT IS NOT CATEGORIZED AS AN APPEARANCE ITEM, MINOR IMPERFECTIONS INCLUDING, BUT NOT LIMITED TO, FLOW MARKS, COLOR BLEMISHES, GATE VESTIGE, AND SOFT FLASH THAT DO NOT AFFECT THE FIT, FORM, OR FUNCTION OF THE PART ARE PERMISSIBLE PER DPNP 4.7-CS-01.

3. REFERENCE MATING COMPONENTS OR EQUIVALENT:

   ASM CONNECTOR 15326678 & 15326679

4. (2.3)X(0.1) DELPHI CORPORATE BRAND TO BE LOCATED ON ANY EXTERIOR SURFACE, PREFERABLY VISIBLE AT FINAL ASSEMBLY. OPTIONAL CONSTRUCTION FOR EXISTING TOOLING MAY BE "PED" OR NO LOGO.

(5) PROCESS SENSITIVE DIMENSION

DIMENSIONS ENCLOSED IN ( ) INDICATE REFERENCE DIMENSIONS AND NO TOLERANCE LIMITS ARE ESTABLISHED

DIMENSIONAL RANGE (MM)									CHART E1
FROM	> 0	> 20	> 30	> 70	>100	>150	>200	>250	>300
TO	20	30	70	100	150	200	250	300	400
TOLERANCE UNLESS OTHERWISE SPECIFIED									
	±0.15	±0.2	±0.3	±0.4	±0.5	±0.6	±0.8	±1	±1.2
ANGULAR TOLERANCE ±2°									

DWG TYPE: PART DRAWING

STYLE

VOLUME (CN³): 0.290

DISTR CODE

UNLESS OTHERWISE SPECIFIED

THIS DOCUMENT IS IN ACCORDANCE WITH ASME Y14.5M-1994 AS MODIFIED BY THE GM GLOBAL DIMENSIONING AND TOLERANCING ADDENDUM - 1997. ALL GEOMETRIC TOLERANCES AND RELATED DATUMS APPLY RFS. RULE #1 (PERFECT FORM AT MMC) DOES NOT APPLY WHEN RELATIONSHIP BETWEEN FEATURES IS ESTABLISHED BY ORIENTATION OR LOCATION TOLERANCES. SEPARATE POSITION CALLOUTS MAY BE BASED SEPARATELY, REGARDLESS OF DATUM REFERENCE.

ALL DIMENSIONS ARE IN MILLIMETERS

REFERENCE

THIRD ANGLE PROJECTION

DO NOT SCALE

USE MATH DATA

NX

DELPHI

DELPHI PACKARD ELECTRICAL/ELECTRONIC ARCHITECTURE
WARREN, OH

		DATE
DR		
APVD1	JOSE HDEZ NOVOA	07MR02
APVD2	G. G. IZQUIERDO	07MR02
APVD3	J. S. MENDENHALL	08MR02
APVD4		
APVD5		

SUBSTANCES OF CONCERN AND RECYCLED CONTENT PER DELPHI 10949001

MATERIAL: POLYAMIDE COMPOUND GRAY

DRAWING NAME: LOCK SECONDARY TPA GT

DRAWING NUMBER: 15430899

SIZE	SCALE	FRAME NO	SHEET NO	STG	REV	N/P
A1	5:1	1 OF 1	1 OF 1	R	01	AA