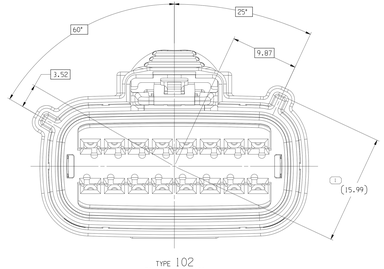

TYPE 102
SAME AS TYPE 101
EXCEPT AS SHOWN

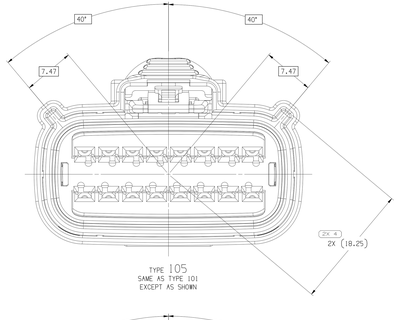

TYPE 105
SAME AS TYPE 101
EXCEPT AS SHOWN

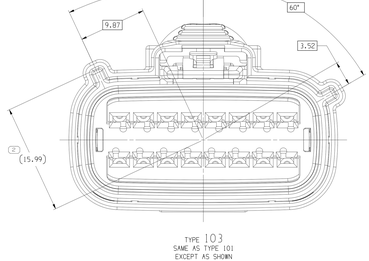

TYPE 103
SAME AS TYPE 101
EXCEPT AS SHOWN

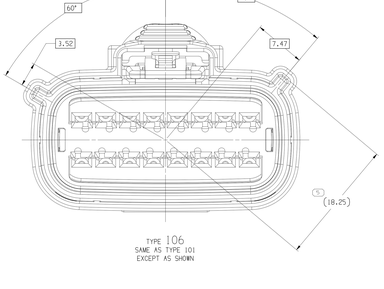

TYPE 106
SAME AS TYPE 101
EXCEPT AS SHOWN

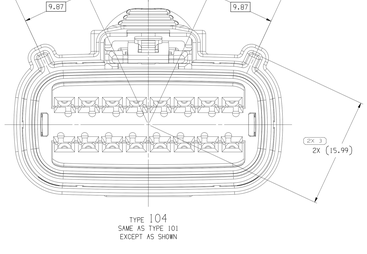

TYPE 104
SAME AS TYPE 101
EXCEPT AS SHOWN

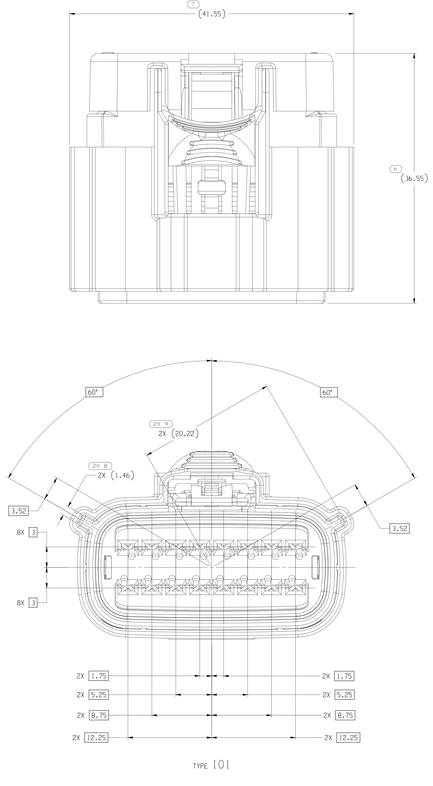

TYPE 101

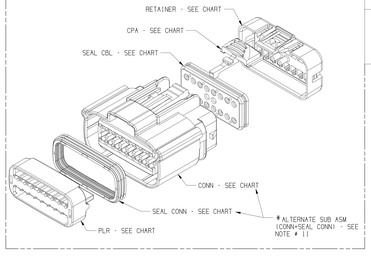

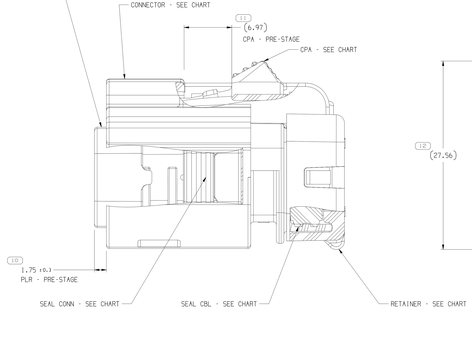

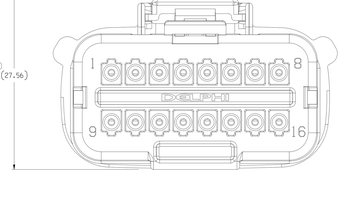

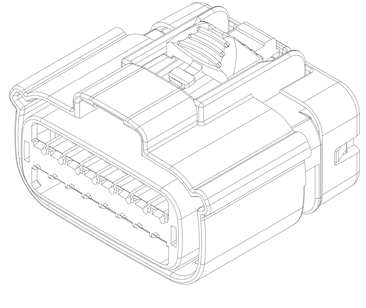

SYMBOL DEFINITION		MISSING SYMBOLS
A DIMENSION WITHOUT AN INSPECTION REPORT SYMBOL DOES NOT REQUIRE INSPECTION. IT MAY BE CONTROLLED ON THE INDIVIDUAL COMPONENT DRAWING.	TOTAL NO OF INSPECTIONS REQUIRED: 16	NO MISSING SYMBOL NUMBER
	LAST NO. USED: 12	

DWG STATUS DATE	SIZE	REV	N/P	CHG	ZONE	REVISION HISTORY	AUTH	DR	APVD	APVD
10JA13	R	01	-	-	-	15514473 -WAS PE244649, REV'D & RELEASED 15514474 -WAS PE244649, REV'D & RELEASED 15514475 -WAS PE244650, REV'D & RELEASED 15514476 -WAS PE244651, REV'D & RELEASED 15514477 -WAS PE244652, REV'D & RELEASED 15514478 -WAS PE244653, REV'D & RELEASED	421071	HCD	HCD	DGI
05FE13	R	02	-	-	-	ALL PARTS - REVISED GRAPHICS	421295	HCD	HCD	DGI
02MY13	R	03	-	-	-	ALL PARTS - RELOCATED DIMS (7 PLCS) AND UPDATED CONN, RETAINER & PLR	421794	JLP	JVW	DAT
01NO13	R	04	-	-	-	ALL PART - REVISED GRAPHICS	424346	EVV	EVV	DGI
05DE13	R	05	-	-	-	ALL PARTS - ADDED "ACCEPTED CABLE O.D." NOTE	424870	AGC	JAA	DGI
18FE14	R	06	-	-	-	ALL PARTS - 1.75 ±0.3 WAS 1.75 AND REVISED RETAINER	425600	EVV	EVV	DGI
16AP14	R	07	-	-	-	33157811 - I4 - RELEASED	426171	EDH	EDH	EDH
08SE14	R	08	-	-	-	33157811-I4 - MOVED TO SHEET 02; ALL PARTS - UPDATED CPA & CONNECTOR	427366	KYT	KYT	RGC
24JN15	R	09	-	-	-	ALL PARTS - UPDATED PART AVAILABILITY	430007	DAG	DAG	JSM
24FE16	R	10	-	-	-	15514474-7B - UPDATED PART AVAILABILITY	432152	NRM	JVW	DGL
12AU16	R	11	-	-	-	ALL PARTS - UPDATED PLR TO LATEST REVISION, 16.97 WAS 6.97, REVISED LABEL (1 PLC) AND PSD WAS DIM #10	433263	NRM	DGL	DGL
25AP17	R	12	*	-	-	ALL PARTS - ADDED ASSEMBLY NOTES, REMOVED "ACCEPTED CABLE O.D." NOTE AND UPDATED NON APPEARANCE ITEM NOTE	436383	DAG	DAG	DGL
12SE17	R	13	-	-	-	15514474 - UPDATED PART AVAILABILITY	437739	CMM	CMM	DGL
06FE18	R	14	-	-	-	ALL PARTS - UPDATED PDM ATTRIBUTES	438951	ACV	DGL	ACV
20JN19	R	15	-	-	-	ALL PARTS - ADDED "PUNCH PATTERN CONFIGURATIONS" & "ASSEMBLIES WITHOUT CPA" NOTES	443339	JLL	DSP	DSP
30SE21	R	16	*	-	-	ALL PARTS - ADDED "FOR ALTERNATE SUB ASM" SUBHEADER COLUMN, "ALTERNATE SUB ASM" COLUMN, "ALTERNATE SUB ASM" LABEL AND "FOR ALTERNATE SUB ASM" NOTE	555159	GLG	JAA	SV
11APZ2	R	17	-	-	-	"SHT 1 OF 3" WAS "SHT 1 OF 2"	557148	EZJ	JAA	SV

NOTES

1. UNLESS OTHERWISE SPECIFIED AND/OR INDICATED:

   DIMENSIONS ARE TO FACE OF VIEW SHOWN AND AUTOMATICALLY ROUNDED BY COMPUTER FOR INSPECTION (SEE MATH MODEL FOR PRECISE DIMENSIONS). FOR ALL OTHER DIMENSIONS NOT SHOWN BUT REQUIRED FOR TOOL BUILD, SEE MATH MODEL FOR PRECISE TOOL PATH DATA.

2. PART IS MANUFACTURED TO GEOMETRIC TOLERANCES. CENTERLINE DIMENSIONS ARE FOR REFERENCE ONLY.
3. SEALING CODE 4 - DESIGN WILL MEET REQUIREMENTS OF SAE/USCAR-2 CONNECTOR SYSTEM ENVIRONMENTAL TEST FLOWCHART (PRESSURE/VACUUM AND SUBMERSION).
4. THIS PRODUCT IS NOT CATEGORIZED AS AN APPEARANCE ITEM. MINOR IMPERFECTIONS INCLUDING, BUT NOT LIMITED TO, FLOW MARKS, COLOR BLEMISHES, GATE VESTIGE, AND SOFT FLASH THAT DO NOT AFFECT THE FIT, FORM, OR FUNCTION OF THE PART ARE PERMISSIBLE PER EANP_4-3_CS_01_EN.
5. FOR APPLICATION DATA SEE THE INDIVIDUAL APPLICATION DRAWINGS.
6. ASSEMBLY TO BE USED WITH APPROPRIATE APTIV HOLDER DESIGN.
7. ASSEMBLY TO BE PROCESSED USING APTIV CONNECTION SYSTEMS BEST PRACTICE METHODS AND/OR CONNECTOR ASSEMBLY INSTRUCTIONS AND APPLICABLE REPAIR PROCEDURES.
8. BEFORE TERMINAL ASSEMBLY: VERIFY THAT PLR IS IN THE PRE-STAGE POSITION ON THE CONNECTOR. IF NOT, RETURN PLR TO PRE-STAGE POSITION.
9. FOR DIFFERENT PUNCH PATTERN CONFIGURATIONS (IF AVAILABLE) SEE SHEET 2
10. FOR ASSEMBLIES WITHOUT CPA SEE DRAWING 15532154
11. * FOR ALTERNATE SUB ASM (CONN+SEAL CONN) FOR AUTOMATIC ASM PROCESS SEE THE TAXI DRAWING - 35598266

15514478	06	A0	106	15514469	13968706	15514487	15514486	15514483	15519096	F	NONE	35591620
15514477	06	A0	105	15514468	13968706	15514487	15514486	15514483	15519096	E	NONE	35591619
15514476	06	A0	104	15514466	13968706	15514487	15514486	15514483	15519096	D	NONE	35591618
15514475	06	A0	103	15514465	13968706	15514487	15514486	15514483	15519096	C	NONE	35591617
15514474	06	AH	102	15514463	13968706	15514487	15514486	15514483	15519096	B	NONE	35591616
15514473	06	AF	101	15514462	13968706	15514487	15514486	15514483	15519096	A	NONE	35591615
PART NO	REV	N/P	TYPE	CONN * FOR ALTERNATE SUB ASM SEE CHART	SEAL CONN	PLR	SEAL CBL	RETAINER	CPA	USCAR	BLOCKED CAVITIES	* ALTERNATE SUB ASM (CONN+SEAL CONN) - SEE NOTE 11

DRAWING NUMBER: 15514480
A1x3 | SCALE 5:1 | FRAME NO 2 OF 2 | SHEET NO 1 OF 3 R | REV 17 | N/P -

LINE DRAWN THROUGH A PART NUMBER INDICATES THAT PHYSICAL PARTS ARE NOT AVAILABLE FOR ORDERING.

PART NUMBERS THAT DO NOT HAVE A LINE PRESENT INDICATE PHYSICAL PARTS ARE AVAILABLE FOR ORDERING.

CONTACT APTIV SALES TO ASSURE AVAILABILITY OF PARTS.

MW TYPE: PART DRAWING

STYLE

VOLUME (CM³) | SYSTEM CODE

UNLESS OTHERWISE SPECIFIED
THIS DOCUMENT IS IN ACCORDANCE WITH ASME Y14.5M-1994 UNLESS OTHERWISE SPECIFIED. ALL DIMENSIONS AND TOLERANCING MUSTBE ADHERED TO. SEPARATE PATTERNS OF FEATURES MAY BE GAGED SEPARATELY REGARDLESS OF DATUM REFERENCES.

ALL DIMENSIONS ARE IN MILLIMETERS

(1) PROCESS SENSITIVE DIMENSION

DIMENSIONS ENCLOSED IN ( ) INDICATE REFERENCE DIMENSIONS AND NO TOLERANCE IS ASSIGNED TO THE DIMENSIONS.

DIMENSIONAL RANGE (MM)									
FROM	0	>6	>30	>80	>120	>160	>200	>250	>300
TO	6	30	80	120	160	200	250	300	500
TOLERANCE (UNLESS OTHERWISE SPECIFIED)									
±0.25	±0.5	±0.8	±1.2	±1.6	±2.0	±2.5	±3.0	±3.5	±4.0
ANGULAR TOLERANCE ±0°									

REFERENCE

THIRD ANGLE PROJECTION | DO NOT SCALE | USE MATH DATA | NX

APTIV
CONNECTION SYSTEMS
WARREN, OH
COPYRIGHT 2013 APTIV, ALL RIGHTS RESERVED.
THIS DRAWING IS THE PROPERTY OF APTIV AND CONTAINS APTIV CONFIDENTIAL INFORMATION. NO PART OF THIS DRAWING MAY BE USED OR UTILIZATION OF THIS DOCUMENT OR ITS RELATED CAD MATH DATA, NO WILL BE COMMUNICATION OF ANY CONTENT TO OTHERS, WITHOUT EXPRESS AUTHORIZATION, IS PROHIBITED.

		DATE
DR		
APVD	HECTOR CLAUDIO	10JA13
APVD	HECTOR CLAUDIO	11JA13
APVD	GERARDO GOMEZ J.	18JA13
APVD		
APVD		

SUBSTANCES OF CONCERN AND RECYCLED CONTENT PER APTIV (DRAWING)

SEE CHART

DRAWING NAME: TAXI ASM CONN 16 F OCS 1.5 SLD

DRAWING NUMBER: 15514480
A1x3 | SCALE 5:1 | FRAME NO 1 OF 2 | SHEET NO 1 OF 3 R | REV 17 | N/P -

PRINTED COPIES ARE UNCONTROLLED
DOCUMENT NAME: 15514480_SHEET_01.DRW
SAVED: 12-APR-22 11:44:14

1 of 80
0844