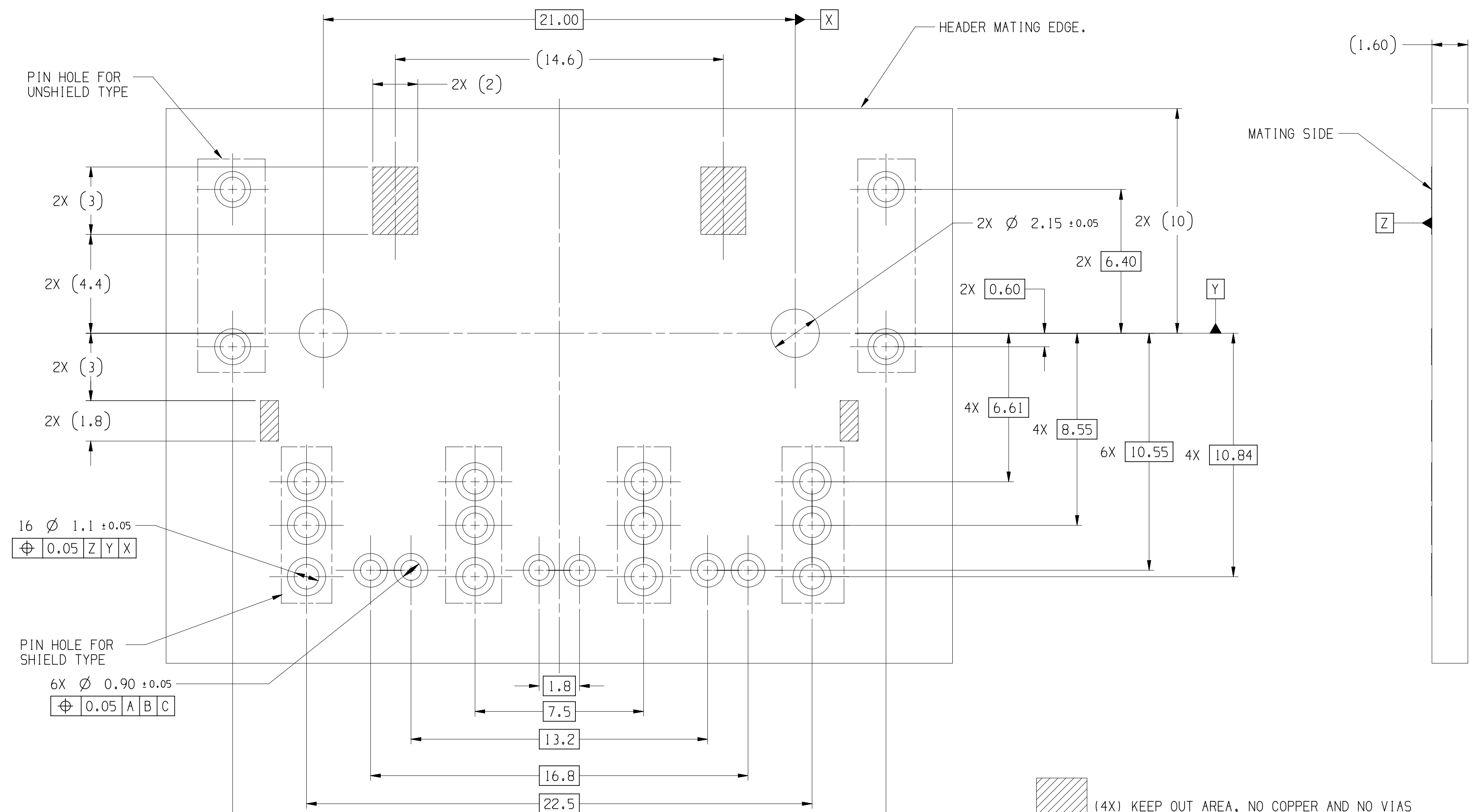
21.00
X
(14.6)
2X (2)
HEADER MATING EDGE.
PIN HOLE FOR UNSHIELD TYPE
2X (3)
2X (4.4)
2X (3)
2X (1.8)
2X Ø 2.15 ±0.05
2X (10)
2X 6.40
2X 0.60
Y
4X 6.61
4X 8.55
6X 10.55
4X 10.84
16 Ø 1.1 ±0.05
⌖ 0.05 Z Y X
PIN HOLE FOR SHIELD TYPE
6X Ø 0.90 ±0.05
⌖ 0.05 A B C
1.8
7.5
13.2
16.8
22.5
29.08
(1.60)
MATING SIDE
Z
(4X) KEEP OUT AREA, NO COPPER AND NO VIAS

PCB TOP VIEW
RECOMMENDED PCB THICKNESS IS 1.60±0.05MM

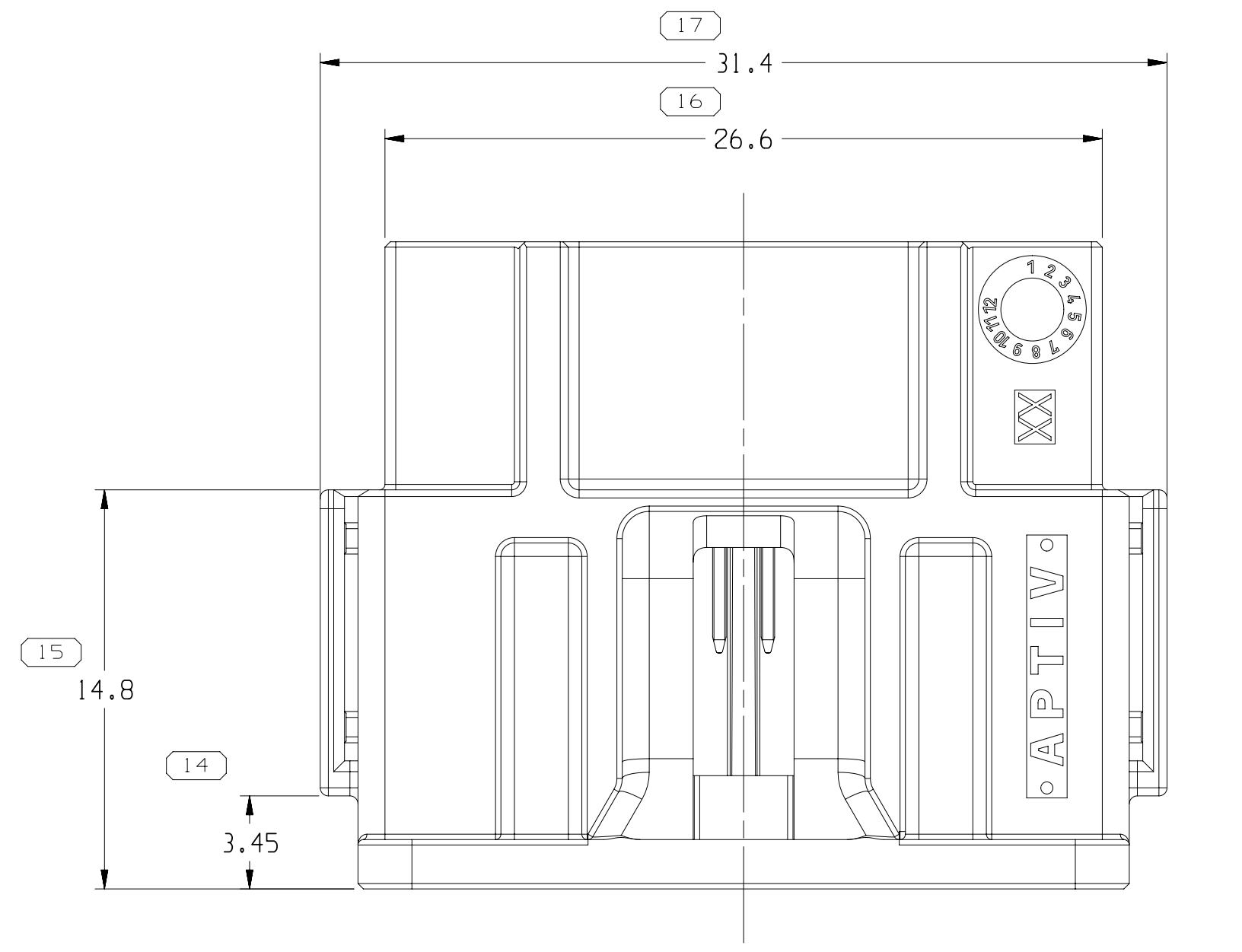
17
31.4
16
26.6
15
14.8
14
3.45
APTIV
XX

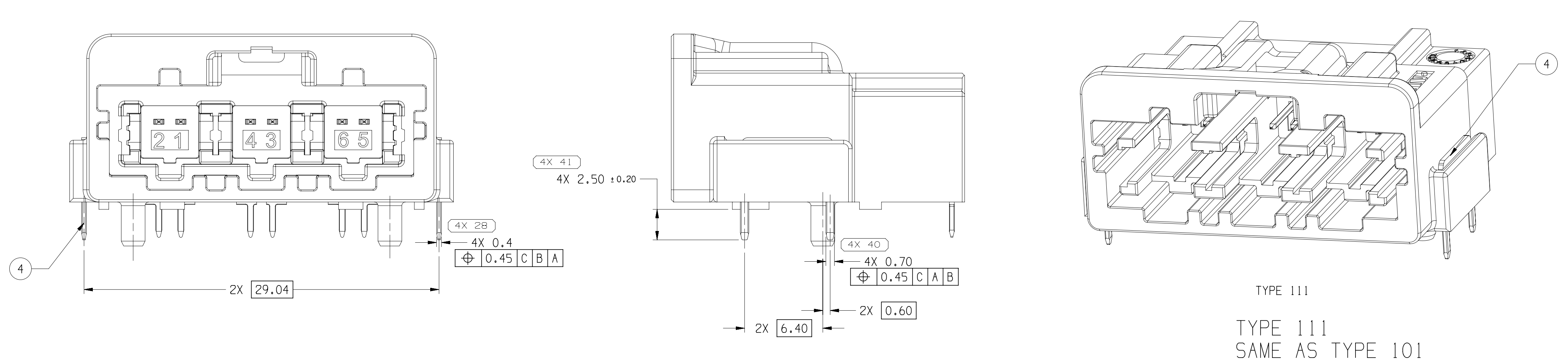
4
2X 29.04
4X 28
4X 0.4
⌖ 0.45 C B A
4X 41
4X 2.50 ±0.20
4X 40
4X 0.70
⌖ 0.45 C A B
2X 0.60
2X 6.40
4
TYPE 111

TYPE 111
SAME AS TYPE 101
EXCEPT AS SHOWN

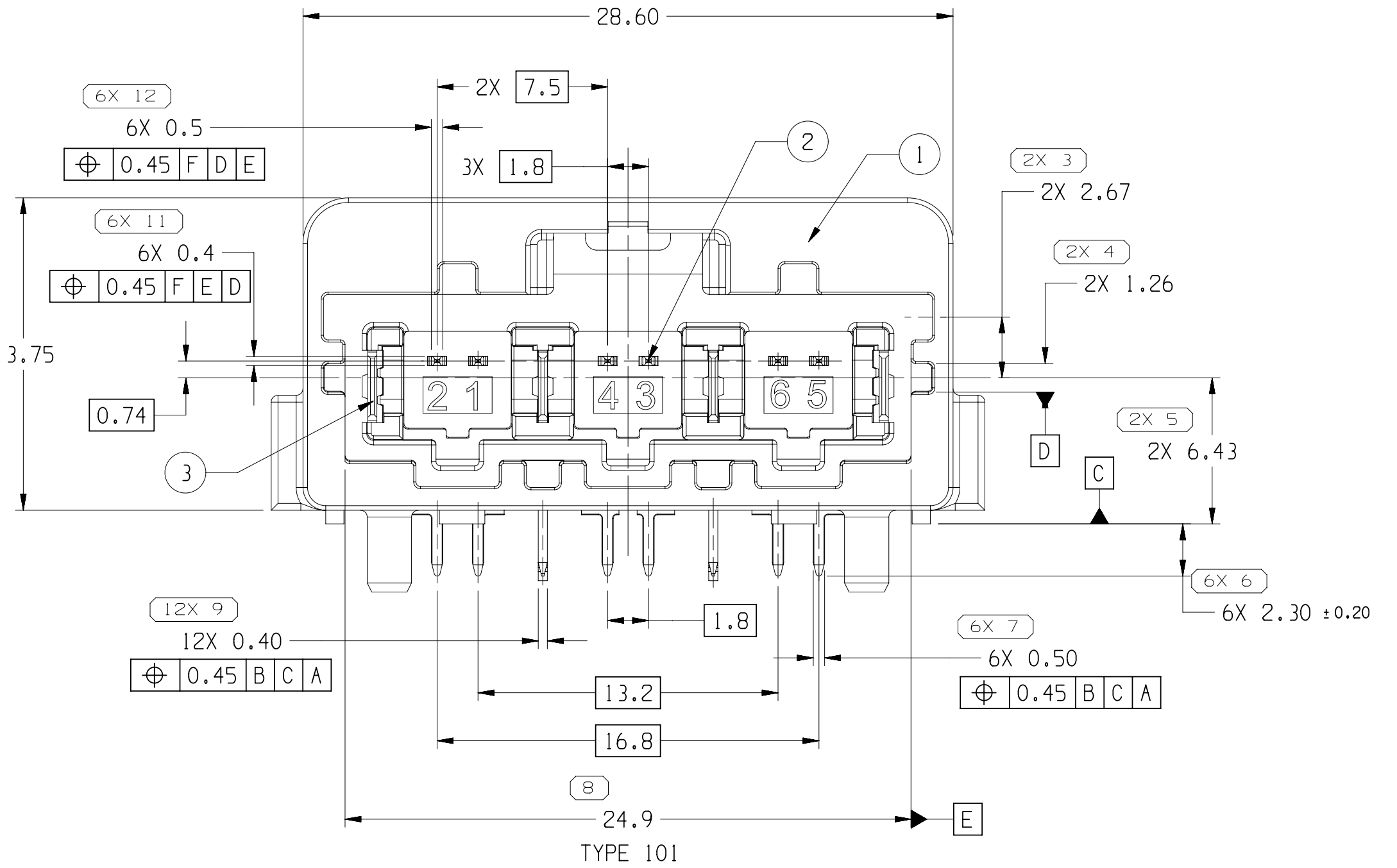
13
28.60
6X 12
6X 0.5
⌖ 0.45 F D E
2X 7.5
3X 1.8
2
1
6X 11
6X 0.4
⌖ 0.45 F E D
10
13.75
0.74
3
2X 3
2X 2.67
2X 4
2X 1.26
2X 5
2X 6.43
D
C
6X 6
6X 2.30 ±0.20
12X 9
12X 0.40
⌖ 0.45 B C A
1.8
6X 7
6X 0.50
⌖ 0.45 B C A
13.2
16.8
8
24.9
E

TYPE 101
SHIELD TYPE

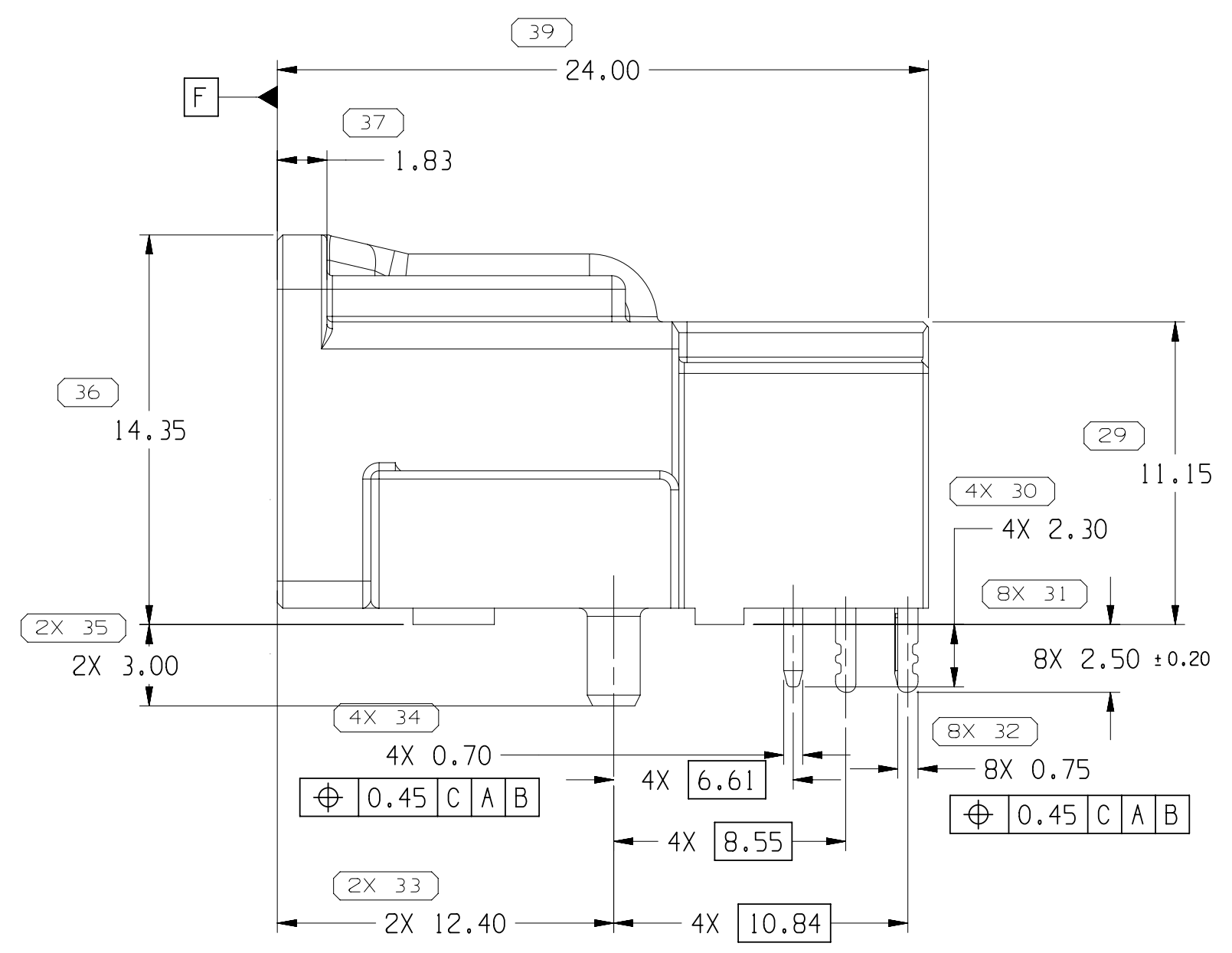
F
39
24.00
37
1.83
36
14.35
29
11.15
4X 30
4X 2.30
8X 31
8X 2.50 ±0.20
2X 35
2X 3.00
4X 34
4X 0.70
⌖ 0.45 C A B
4X 6.61
8X 32
8X 0.75
⌖ 0.45 C A B
4X 8.55
2X 33
2X 12.40
4X 10.84

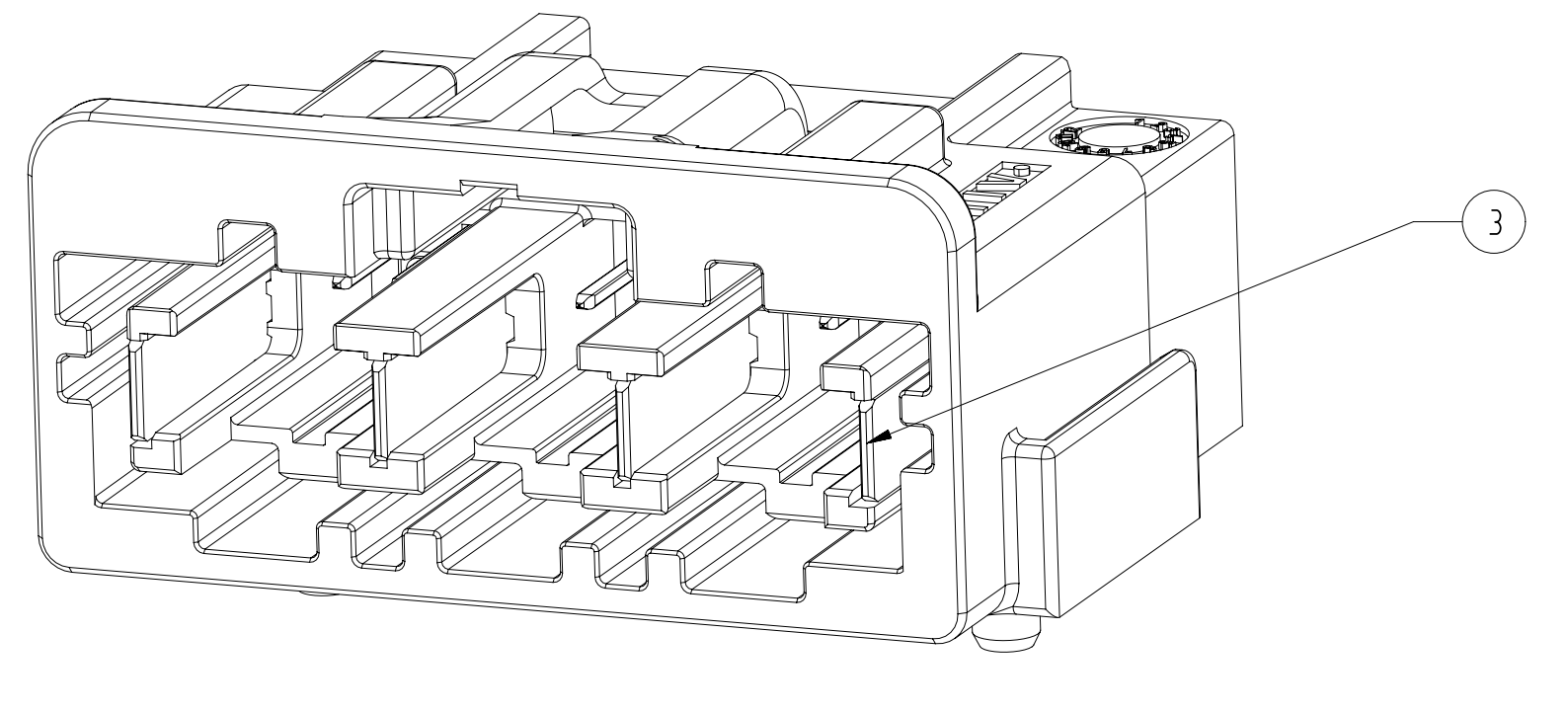

TYPE 101

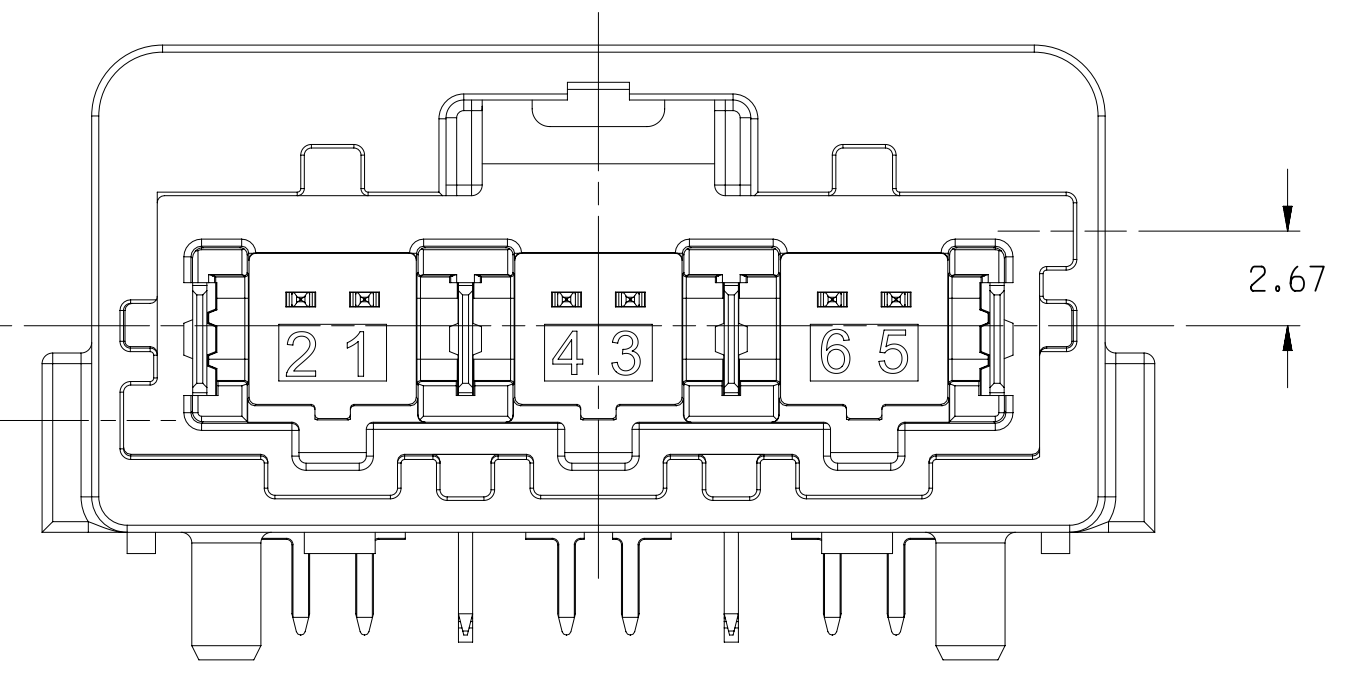

TYPE 102&112 CODE B
SAME AS TYPE 101
EXCEPT AS SHOWN

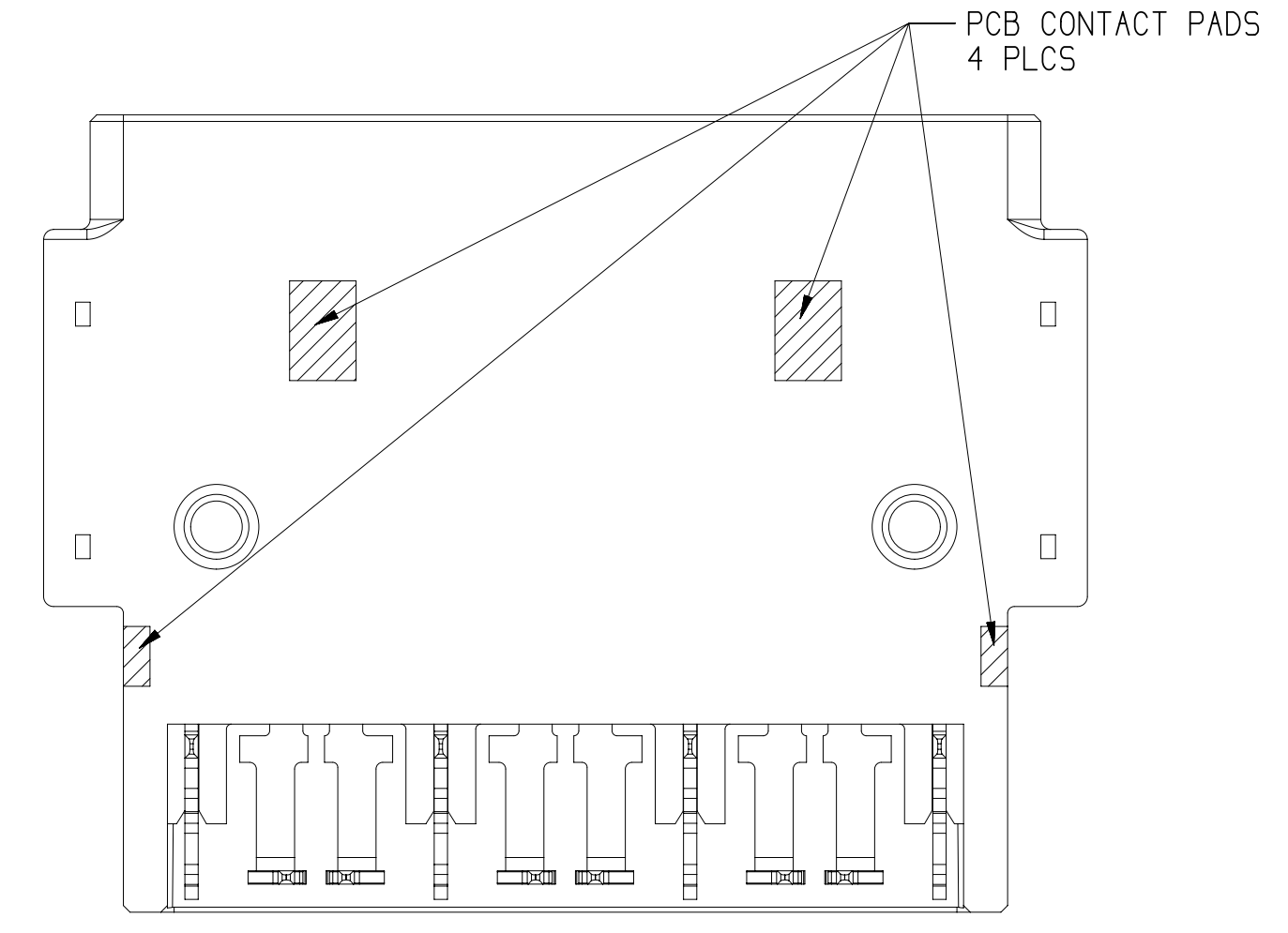
PCB CONTACT PADS
4 PLCS

PCB CLEAROUT REGION

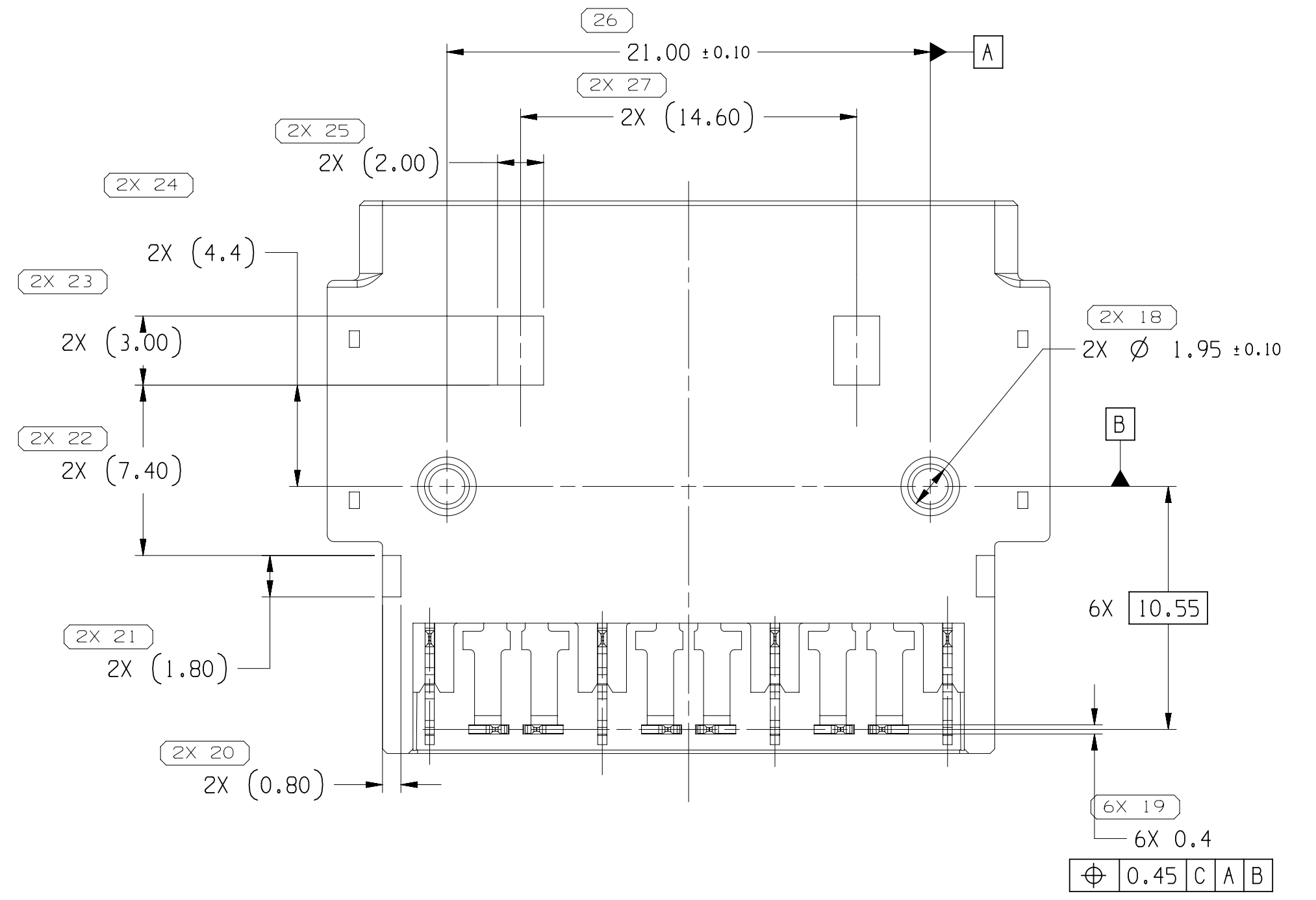
26
21.00 ±0.10
A
2X 27
2X (14.60)
2X 25
2X (2.00)
2X 24
2X (4.4)
2X 23
2X (3.00)
2X 22
2X (7.40)
2X 18
2X Ø 1.95 ±0.10
B
6X 10.55
2X 21
2X (1.80)
2X 20
2X (0.80)
6X 19
6X 0.4
⌖ 0.45 C A B

SYMBOL DEFINITION		
A DIMENSION WITHOUT AN INSPECTION REPORT SYMBOL ⬭ DOES NOT REQUIRE INSPECTION. IT MAY BE CONTROLLED ON THE INDIVIDUAL COMPONENT DRAWING.	TOTAL NO OF INSPECTIONS REQUIRED	116
	LAST NO. USED	41

MISSING SYMBOLS
1-2 38

DWG STATUS										
DATE	STG	REV	N/P	CHG	ZONE	REVISION HISTORY	AUTH	DR	APVD 1	APVD 2
02JL21	R	01	-	-		ALL PART DRAWING RELEASE	446886	DYE	JYQ	GG
03MY23	R	02	-	-		UPDATE PDM ATTRIBUTES	449381	DYE	YQJ	GG

NOTES

1. UNLESS OTHERWISE SPECIFIED AND/OR INDICATED:

   DIMENSIONS ARE TO FACE OF VIEW SHOWN AND AUTOMATICALLY ROUNDED BY COMPUTER FOR INSPECTION (SEE MATH MODEL FOR PRECISE DIMENSIONS). FOR ALL OTHER DIMENSIONS NOT SHOWN BUT REQUIRED FOR TOOL BUILD, SEE MATH MODEL FOR PRECISE TOOL PATH DATAMATERIALS

2. THIS PRODUCT IS NOT CATEGORIZED AS AN APPEARANCE ITEM, MINOR IMPERFECTIONS INCLUDING, BUT NOT LIMITED TO, FLOW MARKS, COLOR BLEMISHES, GATE VESTIGE, AND SOFT FLASH THAT DO NOT AFFECT THE FIT, FORM, OR FUNCTION OF THE PART ARE PERMISSIBLE PER EANP_4-3_CS_01_EN.

3. MATERIAL:
   - HOUSING: PA6T/66;
   - TERMINAL: BRASS,
     CONTACT AREA ,SOLDER TAIL AREA TIN PLATED,
     OVER NICKEL UNDER-PLATING.
   - SHIELD TERMINAL: STAIN PLATED,SOLDER TAIL AREA TIN PLATED,
     OVER NICKEL UNDER-PLATING.
   -HOLD DOWN: STAIN PLATED, OVER NICKEL AND TIN UNDER-PLATING

4. ELECTRICAL SPECIFICATION:
   - IMPEDANCE: 100Ω
   - SI SPECIFICATION: OA TC2 FOR 100M AND TC9 FOR 1000M.

5. MECHANICAL SPECIFICATION:
   - MATING CYCLES: 25 TIMES
   - RETENTION FORCE LATCH: 110N MIN.

6. WORKING TEMPERATURE RANGE: -40° C TO +105° C

7. SOLDERING PROCESS: IN WAVE SOLDER OR LEAD-FREE REFLOW SOLDERING PROCESS, MAX SOLDERING TEMPERATURE: +260° C FOR 10 SEC.

4	HOLD DOWN	STAINLESS STEEL	USED FOR UNSHIELD TYPE
3	SHIELD TERMINAL	STAINLESS STEEL	USED FOR SHIELD TYPE
2	TERMINAL	COPPER ALLOY	
1	HOUSING	PA6T/66	
ITEM NO.	PART NAME	MATERIAL	REMARK

35210714	01	-	112	UNSHIELD	B	CREAM WHITE	1	6	0	2	5.76
35210713	01	-	111	UNSHIELD	A	JET BLACK	1	6	0	2	5.76
35210701	01	-	102	SHIELD	B	CREAM WHITE	1	6	4	0	6.76
35210700	01	-	101	SHIELD	A	JET BLACK	1	6	4	0	6.76
PART NO.	REV	N/P	TYPE	SHIELD TYPE	CODE	COLOR	HOUSING QTY.	TERMINAL QTY.	SHIELD TERMINAL QTY.	HOLD DOWN QTY.	WEIGHT (g)

DRAWING NUMBER						
35210704						
SIZE	SCALE	FRAME NO	SHEET NO	STG	REV	N/P
A1x3	5:1	2 OF 2	1 OF 1	R	02	-

(39) PROCESS SENSITIVE DIMENSION

DIMENSIONS ENCLOSED IN ( ) INDICATE REFERENCE DIMENSIONS AND NO TOLERANCE LIMITS ARE ESTABLISHED

DIMENSIONAL RANGE (MM)									CHART E1
FROM	>0	>20	>30	>70	>100	>150	>200	>250	>300
TO	20	30	70	100	150	200	250	300	400
TOLERANCE UNLESS OTHERWISE SPECIFIED	±0.15	±0.2	±0.3	±0.4	±0.5	±0.6	±0.8	±1	±1.2

ANGULAR TOLERANCE ±2°

A ——— LINE DRAWN THROUGH A PART NUMBER INDICATES THAT PHYSICAL PARTS ARE NOT AVAILABLE FOR ORDERING.

PART NUMBERS THAT DO NOT HAVE A LINE PRESENT INDICATE THAT PHYSICAL PARTS ARE AVAILABLE FOR ORDERING.

CONTACT APTIV SALES TO ASSURE AVAILABILITY OF PARTS.

DWG TYPE
PART DRAWING

STYLE

VOLUME (CM³)

DISTR CODE
D

UNLESS OTHERWISE SPECIFIED

THIS DOCUMENT IS IN ACCORDANCE WITH ASME Y14.5M-1994 AS AMENDED BY THE GM GLOBAL DIMENSIONING AND TOLERANCING ADDENDUM-2001. SEPARATE PATTERNS OF FEATURES MAY BE GAGED SEPARATELY REGARDLESS OF DATUM REFERENCES.

ALL DIMENSIONS ARE IN MILLIMETERS

REFERENCE

THIRD ANGLE PROJECTION

DO NOT SCALE

USE MATH DATA

CAD NX

•APTIV•

CONNECTION SYSTEMS
Chennai, India

COPYRIGHT 2020 APTIV. ALL RIGHTS RESERVED.

THIS DRAWING IS THE PROPERTY OF APTIV AND CONTAINS APTIV CONFIDENTIAL INFORMATION. THE REPRODUCTION, DISTRIBUTION AND UTILIZATION OF THIS DOCUMENT OR ITS RELATED CAD MATH DATA, AS WELL AS COMMUNICATION OF ANY CONTENT TO OTHERS, WITHOUT EXPRESS AUTHORIZATION, IS PROHIBITED.

		DATE
DR		
APVD1	DANIEL YE	20AU20
APVD2	YINGQUAN JING	20AU20
APVD3	GARY GUAN	20AU20
APVD4		
APVD5		

SUBSTANCES OF CONCERN AND RECYCLED CONTENT PER APTIV 10949001

MATERIAL
SEE CHART

DRAWING NAME
ASM CONN AMEC 3PORT 90DEG

DRAWING NUMBER						
35210704						
SIZE	SCALE	FRAME NO	SHEET NO	STG	REV	N/P
A1x3	5:1	1 OF 2	1 OF 1	R	02	-

35210704