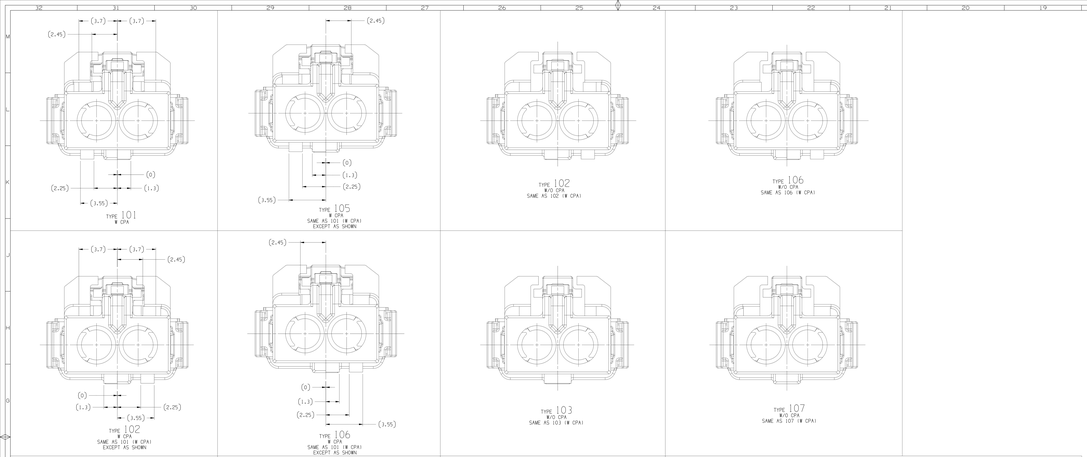

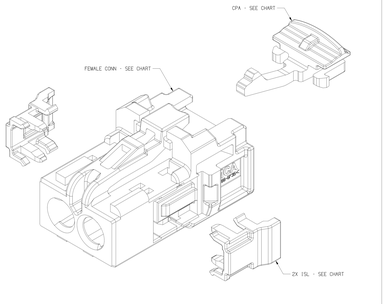

EXPLODED VIEW

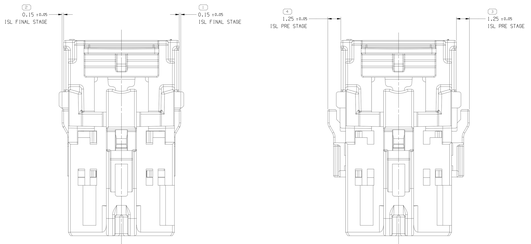

ISL AT FINAL STAGE CONDITION

ISL AT PRE STAGE CONDITION

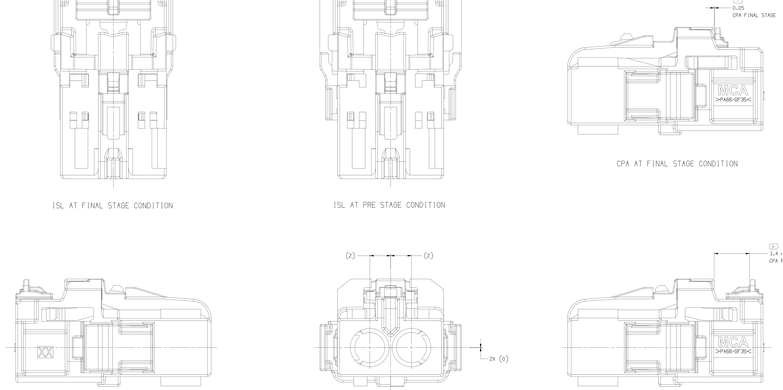

CPA AT FINAL STAGE CONDITION

CPA AT PRE STAGE CONDITION

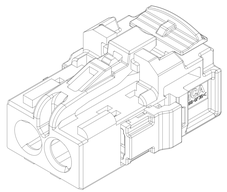

SYMBOL DEFINITION	
A DIMENSION WITHOUT AN INSPECTION REPORT SYMBOL (*) DOES NOT REQUIRE INSPECTION. IT MAY BE CONTROLLED ON THE INDIVIDUAL COMPONENT DRAWING.	TOTAL NO. OF INSPECTIONS REQUIRED: 9
	LAST NO. USED: 9

MISSING SYMBOLS
NO MISSING SYMBOL NUMBER

REVISION HISTORY								
CAD FILE	REVISION	ECO	ECR	ITEM		DATE	BY	APVD
1JM021	B	01	-	-	ALL PARTS - RELEASED PART DRAWING	050875	KS	KA
2JM022	B	02	-	-	ALL PARTS - REVISED GRAPHICS.	057506	WV	KV
1JM023	B	03	-	-	ALL PARTS - REVISED GRAPHICS AND CHART.	059829	SBW	DW

PPN1126	03	-	107	P552099	P547657	NONE	F
PPN1124	03	-	106	P552094	P547657	NONE	E
PPN1123	03	-	105	P552093	P547657	NONE	E
PPN1122	03	-	104	P552092	P547657	NONE	D
PPN1121	03	-	103	P552091	P547657	NONE	C
PPN1120	03	-	102	P552090	P547657	NONE	B
PPN1119	03	-	101	P547563	P547657	NONE	A
PPN1118	03	-	107	P552099	P547657	P547566	F
PPN1125	03	-	106	P552094	P547657	P547566	E
PPN1116	03	-	105	P552093	P547657	P547566	E
PPN1115	03	-	104	P552092	P547657	P547566	D
PPN1114	03	-	103	P552091	P547657	P547566	C
PPN1113	03	-	102	P552090	P547657	P547566	B
PPN1104	03	-	101	P547563	P547657	P547566	A
PART NO	REV	N/P	TYPE	CONNECTOR	ISL	CPA	CODE

NOTES

1. UNLESS OTHERWISE SPECIFIED AND/OR INDICATED:

   DIMENSIONS ARE TO FACE OF VIEW SHOWN AND
   ARE FOR REFERENCE ONLY. REFER TO INSPECTION
   /SEE MATH MODEL FOR PRECISE DIMENSIONS. FOR ALL
   OTHER DIMENSIONS NOT SHOWN BUT REQUIRED FOR TOOL
   BUILD, SEE MATH MODEL FOR PRECISE TOOL PATH DATA.

2. THIS PRODUCT IS NOT CATEGORIZED AS AN APPEARANCE ITEM. MINOR
   IMPERFECTIONS INCLUDING, BUT NOT LIMITED TO, FLOW MARKS, COLOR
   BLEMISHES, GATE VESTIGE, AND SOFT FLASH THAT DO NOT AFFECT THE
   FIT, FORM, OR FUNCTION OF THE PART ARE PERMISSIBLE PER ENVP-A-1.CS.01.EN.

3. FOR APPLICATION DATA SEE THE INDIVIDUAL APPLICATION DRAWINGS.

4. DELIVERY CONDITION TO WIRE ASSEMBLY PLANT, VERIFY THE ISL IS IN
   THE PRE-STAGE POSITION.

5. BEFORE TERMINAL ASSEMBLY, VERIFY THE ISL IS IN THE PRE-STAGE POSITION
   ON THE CONNECTOR; IF NOT, RETURN THE ISL TO PRE-STAGE POSITION.

6. DELIVERY CONDITION TO VEHICLE ASSEMBLY PLANT, VERIFY THE ISL IS IN
   THE FINAL-STAGE POSITION.

DIMENSIONAL TOLERANCES UNLESS OTHERWISE SPECIFIED						
DIM	±	DIM	±	DIM	±	DIM ±
1 DIM	0.25	2 DIM	0.13	3 DIM	0.05	ANGLE 1.00°
4 DIM	0.01	5 DIM	0.005	6 DIM	0.0025	ANGLE 0.50°
7 DIM	0.0005	8 DIM	0.0001	9 DIM	0.00005	ANGLE 0.05°

(N/A) PRESS SENSITIVE DIMENSION

DIMENSION ENCLOSED IN A RECTANGLE IS PRESS SENSITIVE. REFER TO PRESS SENSITIVE DIMENSIONS CHART.

THIRD ANGLE PROJECTION

ISO NOT TO SCALE IF NOT SPECIFIED

UNPUBLISHED. PROPRIETARY INFORMATION. THIS DRAWING IS THE PROPERTY OF APTIV (PREVIOUSLY DELPHI TECHNOLOGIES). IT IS TO BE USED ONLY FOR THE PURPOSE FOR WHICH IT IS SUBMITTED AT THE REQUEST OF APTIV. NO REPRODUCTION OR ANY USAGE TO OTHERS, WITHOUT EXPRESS WRITTEN AUTHORIZATION, IS PROHIBITED.

PART DRAWING

UNLESS OTHERWISE SPECIFIED
THIS DRAWING AND THE DATA CONTAINED THEREIN ARE APTIV CONFIDENTIAL WITH OWNERSHIP RIGHTS AND MUST BE RETURNED UPON REQUEST.

CONFIDENTIALITY OF CONTENTS AND NOTICE CONFIDENTIALITY

SEE CHART

ALL DIMENSIONS ARE IN MILLIMETERS.

TAXI ASM CONN 2 F MINI COAX

35511926

A1x4 | 1511 | 2 OF 2 | 1 OF 1 | R 03

35511926

A1x4 | 1511 | 2 OF 2 | 1 OF 1 | R 03

32215050