ITEM NO	QTY	DESCRIPTION	MATERIAL
1	1	HOUSING	PA
2	1	CONTACT PIN	BRASS PER ASTM B16,GOLD PLATING(INTERFACE AREA)
3	1	INSULATOR	LCP COLOR: NATURAL
4	1	BODY	ZN #3, CU 10-15μm, NI 2.5-3.75μm, MATTE SN: 2.5-3.75μm

SYMBOL DEFINITION		
A DIMENSION WITHOUT AN INSPECTION REPORT SYMBOL (DOES NOT REQUIRE INSPECTION. IT MAY BE CONTROLLED ON THE INDIVIDUAL COMPONENT DRAWING.	TOTAL NO OF INSPECTIONS REQUIRED	32
	LAST NO. USED	20

MISSING SYMBOLS
11-12 15-16

DWG STATUS										
DATE	STG	REV	N/P	CHG	ZONE	REVISION HISTORY	AUTH	DR	APVD 1	APVD 2
17AU21	R	01	-	-		FIRST RELEASED.	447014	SM	GG	WHM
05JU23	R	02	-	-		REVISED NOTES AND PLATING THICKNESS UNIT	449353	LC	WHM	JYQ

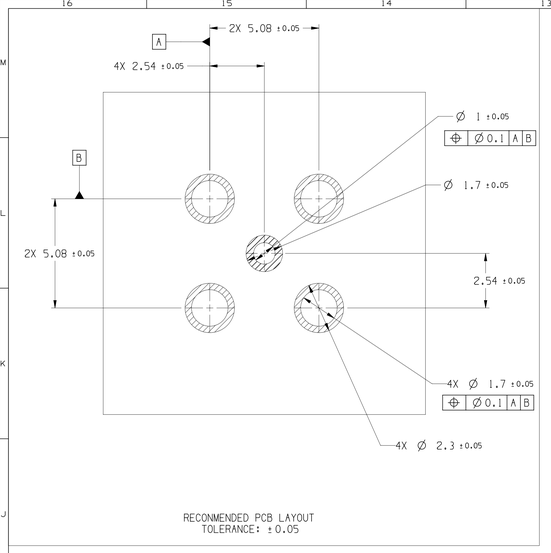

RECONMENDED PCB LAYOUT
TOLERANCE: ±0.05

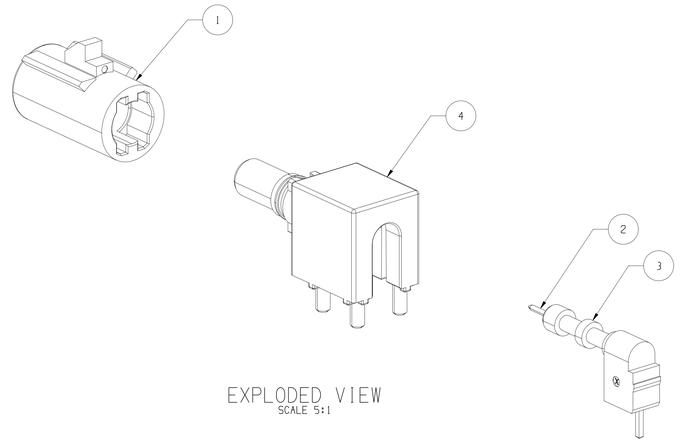

EXPLODED VIEW
SCALE 5:1

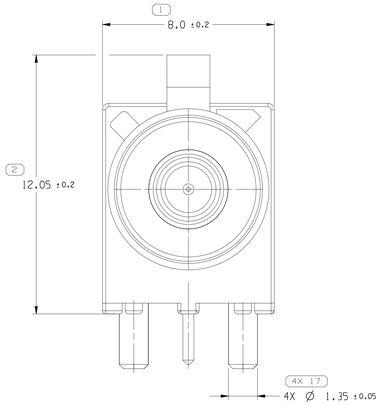

CODE A VIEW

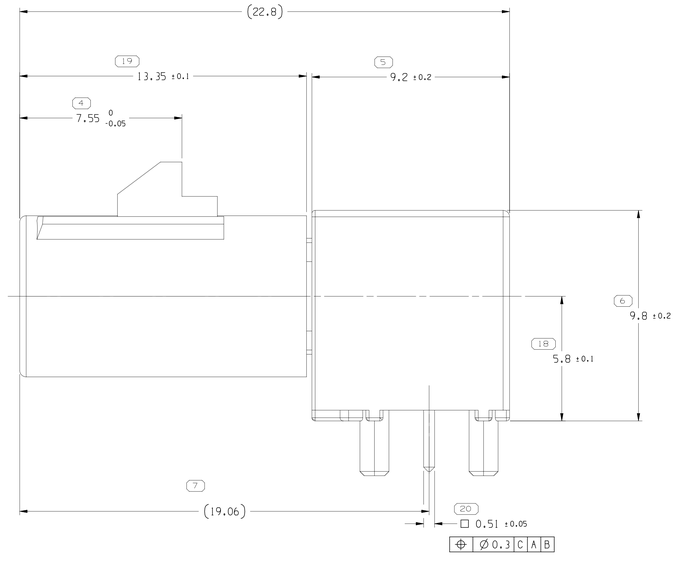

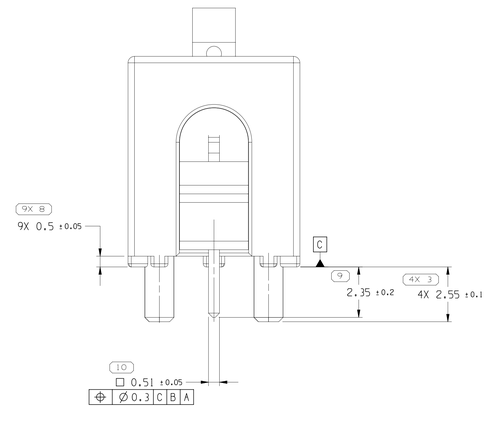

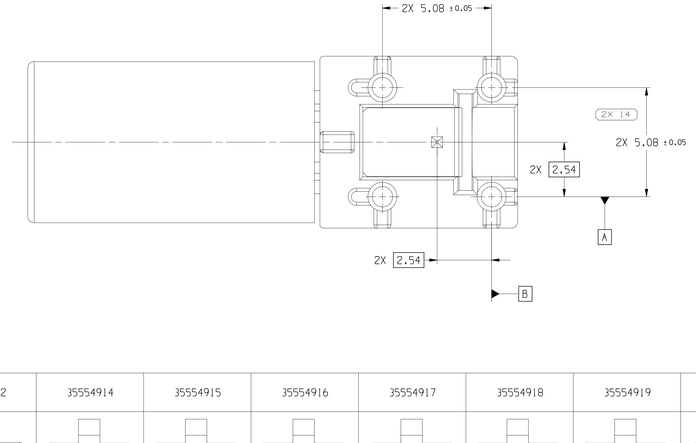

NOTES:

1. UNLESS OTHERWISE SPECIFIED AND/OR INDICATED:
   DIMENSIONS ARE TO FACE OF VIEW SHOWN AND AUTOMATICALLY ROUNDED BY COMPUTER FOR INSPECTION (SEE MATH MODEL FOR PRECISE DIMENSIONS). FOR ALL OTHER DIMENSIONS NOT SHOWN BUT REQUIRED FOR TOOL BUILD, SEE MATH MODEL FOR PRECISE TOOL PATH DATAMATERIALS

2. MATERIAL: SEE TABLE
   PLATING:
   - TERMINALS: GOLD ON CONTACT AREA ;MATTE TIN ON SOLDER AREA
   - SHIELD: MATTE TIN ON SOLDER AREA

3. ELECTRICAL SPECIFICATION:
   A. IMPEDANCE: 50 Ω
   B. FREQUENCY RANGE: DC TO 6.0 GHz
   C. STANDING WAVE RATIO: 1.4 (15.6 dB)MAX (DC TO 2.0 GHz)
      1.5 (13.98 dB)MAX (2.0 GHZ TO 3.0 GHz)
      1.6 (12.74 dB)MAX (3.0 GHZ TO 6.0 GHz)
   D. INSERTION LOSS: 0.3 dB MAX (DC TO 3 GHZ)
      0.45 dB MAX (3 GHZ TO 6 GHZ))
   E. CENTER CONTACT RESISTANCE: 24mΩ MAX
   F. OUTER CONTACT RESISTANCE: 5mΩ MAX
   G. WORKING VOLTAGE: 60V MAX
   H. POWER CURRENT 1A MAX
   I. DIELECTRIC WITHSTANDING VOLTAGE: 800V MIN.
   J. INSULATION RESISTANCE: 100mΩ MIN.

4. MECHANICAL SPECIFICATION:
   - DURABILITY: 25 CYCLES MIN.
   - RETENTION FORCE LATCH: 11ON MIN.
   - ENGAGEMENT FORCE: 25N MAX .
   - FAKRA INTERFACE PER USCAR-18

5. WORKING TEMPERATURE RANGE: -40 C TO +105 C

6. RECOMMENDED PCB THICKNESS: 1.6mm.

7. SOLDERING PROCESS: LEAD-FREE REFLOW SOLDERING PROCESS, MAX SOLDERING TEMPERATURE: +260 C FOR 10 SEC.

PN	35554907	35554908	35554909	35554910	35554911	35554912	35554914	35554915	35554916	35554917	35554918	35554919	35554920	35554921
PLUG	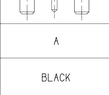	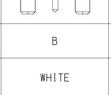	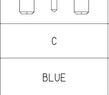	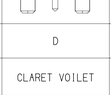		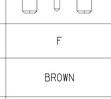		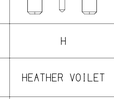						
CODE	A	B	C	D	E	F	G	H	I	K	L	M	N	Z
COLOR	BLACK	WHITE	BLUE	CLARET VOILET	GREEN	BROWN	GRAY	HEATHER VOILET	BEIGE	CURRY	CARMINE RED	PASRAL ORANGE	PASTAL GREEN	WATER BLUE
RAL NO.	9005	9001	5005	4004	6002	8011	7031	4003	1001	1027	3002	2003	6019	5021

A ——— LINE DRAWN THROUGH A PART NUMBER INDICATES THAT PHYSICAL PARTS ARE NOT AVAILABLE FOR ORDERING.

PART NUMBERS THAT DO NOT HAVE A LINE PRESENT INDICATE THAT PHYSICAL PARTS ARE AVAILABLE FOR ORDERING.

CONTACT APTIV SALES TO ASSURE AVAILABILITY OF PARTS.

DWG TYPE: PART DRAWING

STYLE

VOLUME (CM³) | DISTR CODE

UNLESS OTHERWISE SPECIFIED
THIS DOCUMENT IS IN ACCORDANCE WITH ASME Y14.5M-1994 AS AMENDED BY THE GM GLOBAL DIMENSIONING AND TOLERANCING ADDENDUM-2001. SEPARATE PATTERNS OF FEATURES MAY BE GAGED SEPARATELY REGARDLESS OF DATUM REFERENCES.

ALL DIMENSIONS ARE IN MILLIMETERS

REFERENCE

(N/A) PROCESS SENSITIVE DIMENSION

DIMENSIONS ENCLOSED IN ( ) INDICATE REFERENCE DIMENSIONS AND NO TOLERANCE LIMITS ARE ESTABLISHED

DIMENSIONAL RANGE (MM)										CHART E1
FROM	> 0	> 20	> 30	> 70	>100	>150	>200	>250	>300	
TO	20	30	70	100	150	200	250	300	400	
TOLERANCE UNLESS OTHERWISE SPECIFIED										
	±0.15	±0.2	±0.3	±0.4	±0.5	±0.6	±0.8	±1	±1.2	
ANGULAR TOLERANCE ±2°										

THIRD ANGLE PROJECTION

DO NOT SCALE

USE MATH DATA

NX

•APTIV•

CONNECTION SYSTEMS
Chennai, India

COPYRIGHT 2021 APTIV. ALL RIGHTS RESERVED.

THIS DRAWING IS THE PROPERTY OF APTIV AND CONTAINS APTIV CONFIDENTIAL INFORMATION. THE REPRODUCTION, DISTRIBUTION AND UTILIZATION OF THIS DOCUMENT OR ITS RELATED CAD MATH DATA, AS WELL AS COMMUNICATION OF ANY CONTENT TO OTHERS, WITHOUT EXPRESS AUTHORIZATION, IS PROHIBITED.

		DATE
DR		
APVD1	S.MANOHARAN	17AU21
APVD2	GARY GUAN	17AU21
APVD3	HUIMIN WANG	17AU21
APVD4		
APVD5		

SUBSTANCES OF CONCERN AND RECYCLED CONTENT PER APTIV 10949001

MATERIAL
SEE CHART

DRAWING NAME
TAXI CONN 0 M FAKRA

DRAWING NUMBER
35554896

SIZE	SCALE	FRAME NO	SHEET NO	STG	REV	N/P
A0	10:1	1 OF 1	1 OF 1	R	02	-

User: 88JYV
Part: 35554896_CYBER_DRAWING
Date: 21-JUN-23 Time: 15:17:24